Ghisa EN-GJL-250 | Cast Iron EN-GJL-250
Fonte EN-GJL-250 | Grauguss EN-GJL-250
Hierro fundido EN-GJL-250 | Чугун EN-GJL-250

Curva caratteristica - *Performance curve* - Courbe caractéristique
Kennlinie* - Curva característica - *Характеристическая кривая

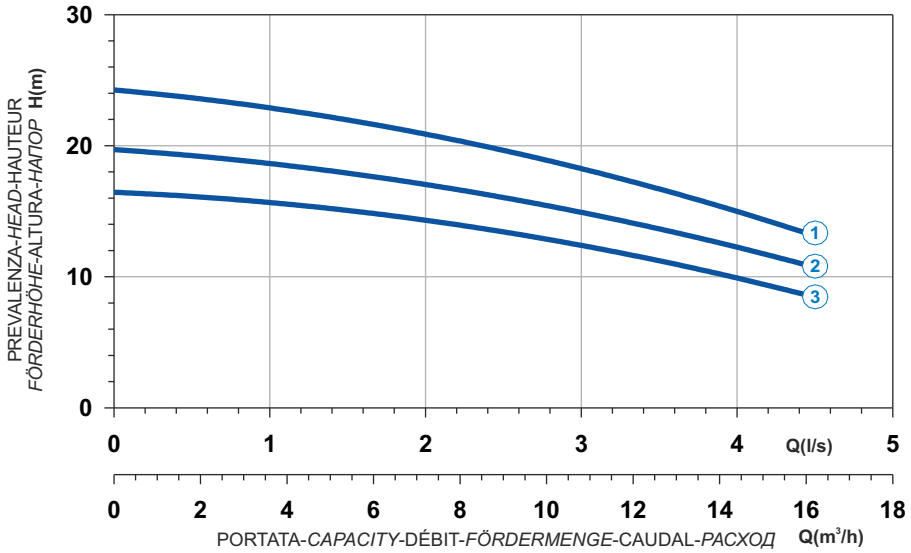

Curve N°	Code	Type	MOTOR Rated power P2 (kW)	Rated current I (A)	Starting current Is (A)	ATEX code
1	7002050	**G271T6T1-J6AA0**	2,4	4,5	26,6	7002788
2	7002051	**G271T6T2-J6AA0**	1,6	3,1	15,2	7002701
3	7002052	**G271T6T3-J6AA0**	1,6	3,1	15,2	7002789

Power supply	3ph 400V 50Hz
R.P.M.	2850
Free passage (mm)	6
Discharge (mm)	DN 40
Max Weight (Kg)	40

T
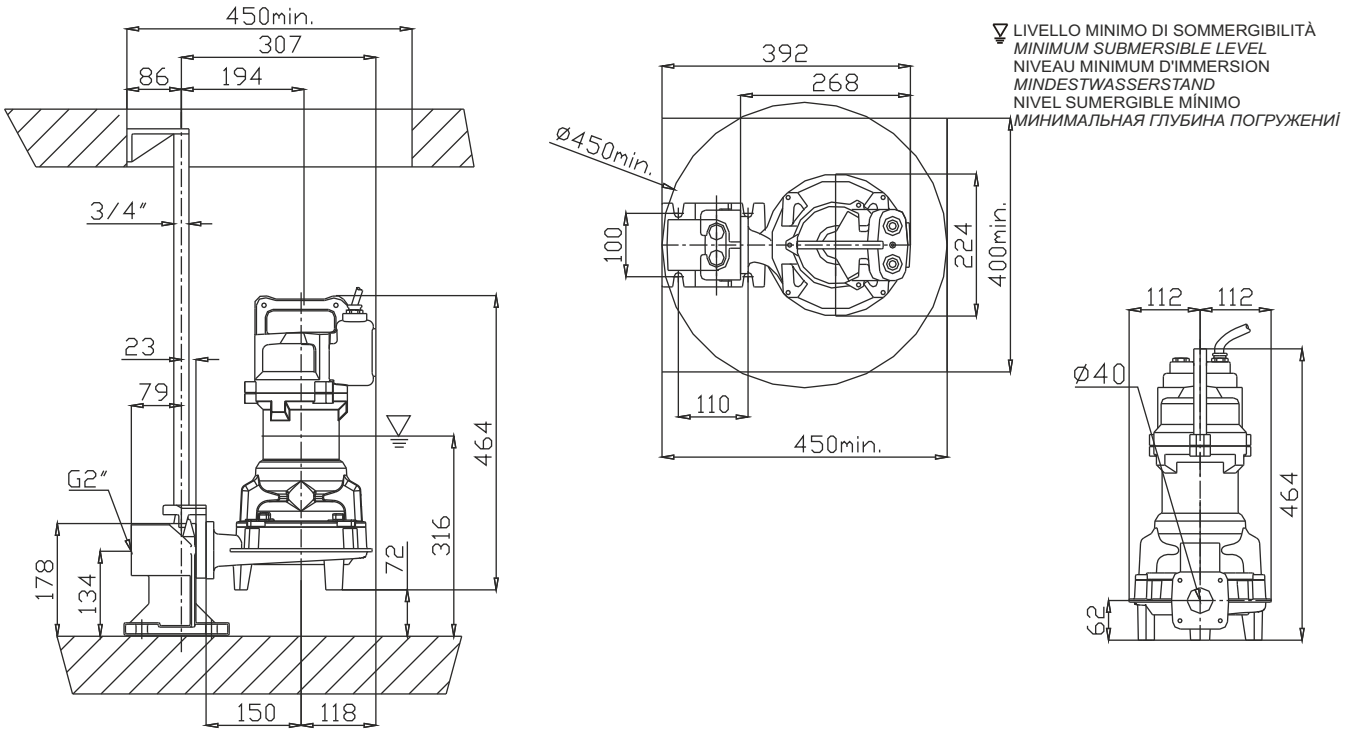
Dimensioni - *Dimensions* - Dimensions - *Abmessungen* - Dimensiones - *Габариты* (mm)