Capacitor motors

KM 43 IP00

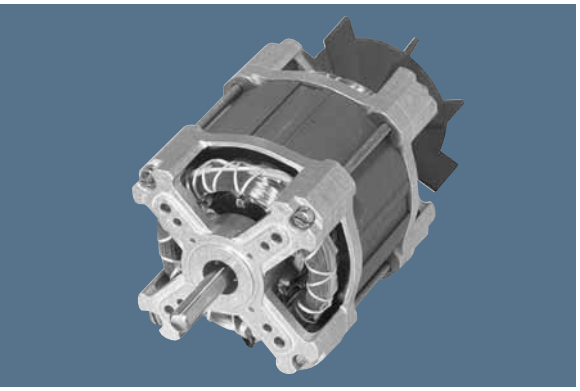

Standard version:
- Direction of rotation clockwise (see connection diagram) symmetric winding, also suitable for counter-clockwise rotation
- Continuous operation S1
- Ball bearings
- Insulation class F(VDE/EN)

Nominal data	Number of poles	Output power	Input power	Nominal voltage	Frequency	Nominal speed	Nominal current	Rated torque	Capacitor	Mass	Dimensions (mm)		Curve
Type		**W**	**W**	**V**	**Hz**	**rpm**	**mA**	**Ncm**	**µF*)**	**kg**	**a**	**b**	
KM 4320/2-3..	2	58	150	230	50	2650	690	20	4,0	1,2	20	83	1
KM 4330/2-3..	2	90	190	230	50	2700	900	31	5,0	1,5	30	93	2
KM 4340/2-3..	2	105	285	230	50	2750	850	38	7,0	1,8	40	103	3
KM 4350/2-3..	2	165	260	230	50	2750	1150	57	8,0	2,2	50	113	4
KM 4360/2-3..	2	180	275	230	50	2750	1200	62	9,0	2,5	60	123	5
KM 4320/4-3..	4	27	85	230	50	1300	380	20	2,5	1,1	20	83	6
KM 4330/4-3..	4	39	100	230	50	1300	440	28	3,0	1,4	30	93	7
KM 4340/4-3..	4	46	105	230	50	1350	460	33	3,5	1,8	40	103	8
KM 4350/4-3..	4	51	115	230	50	1350	500	36	4,0	2,1	50	113	9
KM 4360/4-3..	4	67	145	230	50	1350	620	47	4,5	2,4	60	123	10

*) not supplied

