Differential Pressure Sensor

Differential pressure transmitter with 8 selectable ranges and Modbus funtionality. NEMA 4X / IP65 rated enclosure. For monitoring the differential pressure of air and other non-flammable and non-aggressive gases. Monitoring air filters, fans, industrial cooling air cycles, control of air and fire dampers.
Options available with LCD display.

Type Overview

Type	Measuring range pressure	Output Signal	Output signal active pressure	Output signal active volumetric flow	Display type
22ADP-154	0...2500 Pa	Modbus	DC 0...5 V, DC 0...10 V	DC 0...5 V, DC 0...10 V	-
22ADP-154L	0...2500 Pa	Modbus	DC 0...5 V, DC 0...10 V	DC 0...5 V, DC 0...10 V	LCD

Technical Data

Electrical data	Power Supply DC	15...24 V, ±10%, 1.4 W
	Power Supply AC	24 V, ±10%, 2 VA
	Electrical connection	Removable spring loaded terminal block max. 2.5 mm²
	Cable entry	Cable gland M20 2 x Ø6 mm, with strain relief 2 x Ø6 mm
Functional data	Sensor Technology	Piezo measuring element
	Communicative control	Modbus RTU (Details see separate document "Sensor Modbus Register")
	Multirange	8 measuring ranges selectable
	Output signal active note	Output DC 0...5/10 V selectable with switch Voltage output: min. 10 kΩ load Current output: max. 500 Ω load
	Display	LCD, 29 x 35 mm with backlight Measured values: Pa, inchWC (configurable) Measured values volumetric flow: m³/h, cfm (configurable)
	Media	Air
Measuring data	Measured values	Differential pressure
	Measuring media	Air and non-aggressive gases
	Measuring range settings pressure	

Setting	range [Pa]	range [inch WC]	Factory setting
S0	0...2500	0...10	✔
S1	0...2000	0...8	
S2	0...1500	0...6	
S3	0...1000	0...4	
S4	0...500	0...2	
S5	0...250	0...1	
S6	0...100	0...0.4	
S7	-100...100	-0.4...0.4	

	Accuracy pressure	deviation compared to the reference device measuring range ≤500 Pa: ±5 Pa measuring range >500 Pa: ±10 Pa

Materials	Cable gland	PA6, black
	Housing	Cover: Lexan, Belimo orange NCS S0580-Y6OR Bottom: Lexan, Belimo orange NCS S0580-Y6OR Seal: 0467 NBR70, black
Safety data	Ambient humidity	95% r.h., non-condensing
	Ambient temperature	-10...50 °C [15...120 °F]
	Medium temperature	-10...50 °C [15...120 °F]
	Protection class IEC/EN	III Safety Extra-Low Voltage (SELV)
	Protection class UL	UL Class 2 Supply
	EU Conformity	CE Marking
	Certification IEC/EN	IEC/EN 60730-1 and IEC/EN 60730-2-6
	Certification UL	pending
	Degree of protection IEC/EN	IP65
	Degree of protection NEMA/UL	NEMA 4X
	Quality Standard	ISO 9001
	Weight	0.29 kg

Safety notes

The installation and assembly of electrical equipment should only be performed by authorized personnel.

The product should only be used for the intended application. Unauthorised modifications are prohibited! The product must not be used in relation with any equipment that in case of a failure may threaten, directly or indirectly, human health or life or result in danger to human beings, animals or assets. Ensure all power is disconnected before installing. Do not connect to live/operating equipment.

Please comply with
• Local laws, health & safety regulations, technical standards and regulations
• Condition of the device at the time of installation, to ensure safe installation
• This data sheet and installation manual

Remarks

Automated Zero-Point calibration (Auto-Zero)

Transmitters equipped with the auto zero calibration are maintenance free.

The Auto-Zero calibration electronically adjusts the transmitter zero every 10 minutes. The function eliminates all output signal drift due to thermal, electronic or mechanical effects. The auto-zero adjustment takes approx. 4 seconds after which the device returns to its normal measuring mode. During the 4 second adjustment period, the output and display values will freeze to the latest measured value.

Manual Zero-Point calibration

In normal operation zero-point calibration should be executed every 12 months.

Attention! For executing zero point calibration the power supply must be connected one hour before.
• Release both connection tubes from the pressure terminals + and -
• Press the button until the LED lights permanently
• Wait until the LED flashes again and reinstall the connection tubes to the pressure ports (note + and -)

Accessories

Scope of delivery

Mounting plate
Dowel
Screws
Strain relief Ø6...8 mm
Cable Gland Nut PG11, Ø6...10 mm

Optional accessories

Description	Type
Duct connector (metal) 40 mm	A-22AP-A02
Duct connector (metal) 100 mm	A-22AP-A04

Wiring diagram

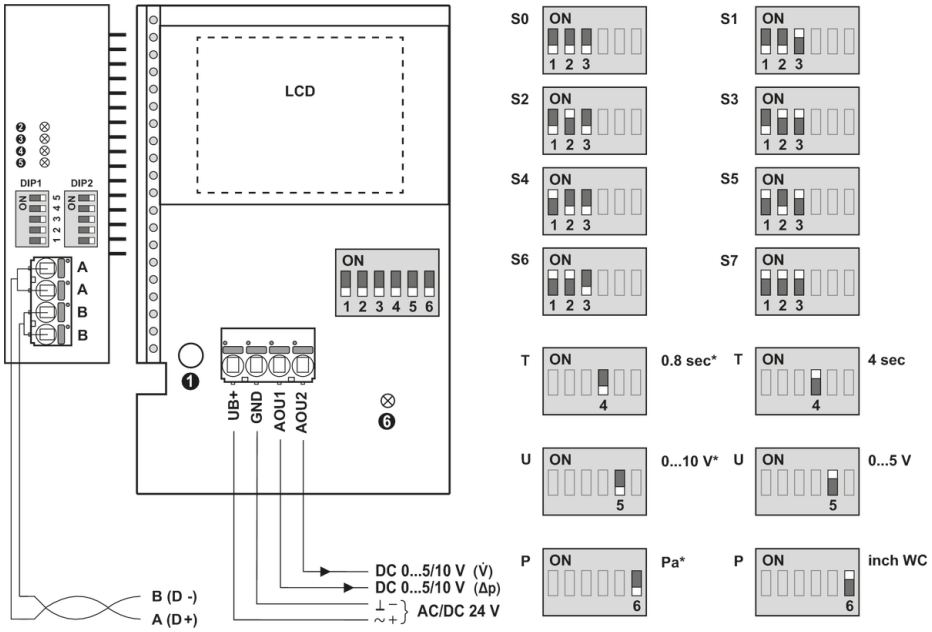

① Button
② red: Error
③ yellow: Tx
④ yellow: Rx
⑤ and ⑥ Status LED
* Factory setting
P Pressure unit
T Response time
U Output signal

Setting	range [Pa]	range [inch WC]	Factory setting
S0	0...2500	0...10	✔
S1	0...2000	0...8	
S2	0...1500	0...6	
S3	0...1000	0...4	
S4	0...500	0...2	
S5	0...250	0...1	
S6	0...100	0...0.4	
S7	-100...100	-0.4...0.4	

Detailed documentation

The separate document Sensor Modbus-Register informs about Modbus register, addressing, parity and bus termination (DIP1: address, DIP2: baud rate, parity, bus termination)

In addition to the information on the bus, the following analog outputs are available:
AOU1: differential pressure
AOU2: volumetric flow
The volumetric flow is calculated from the differential pressure, the k-factor and the height
Factory setting for the k-factor is 1.00 and for the height 330 metres above sea level.
The values of the k-factor and the height can be changed via Modbus or BACnet.

Notes Wiring RS485

Connection via safety isolating transformer.

Parallel connection of other actuators possible. Observe the performance data.

The wiring of the line for Modbus (RTU) / BACnet (MS/TP) is to be carried out in accordance with applicable RS485 regulations.

Modbus / BACnet: Supply and communication are not galvanically isolated. Connect earth signal of the devices with one another.

Wiring RS485 (Modbus RTU & BACnet MS/TP)

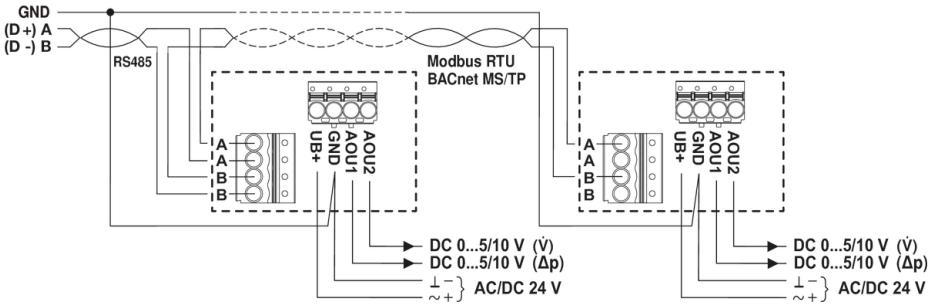
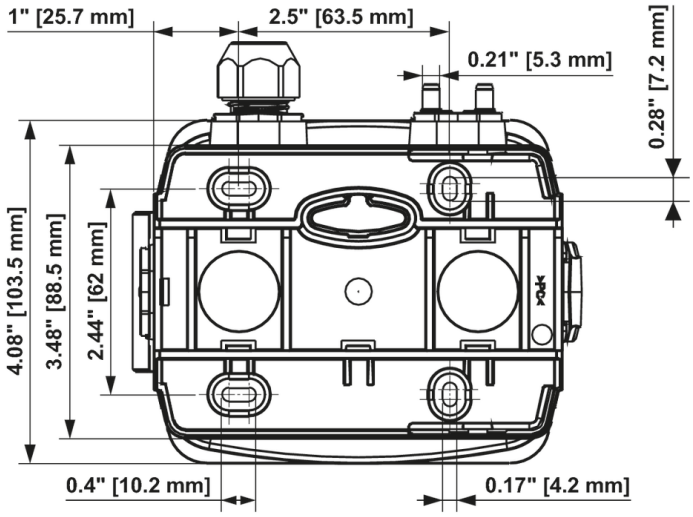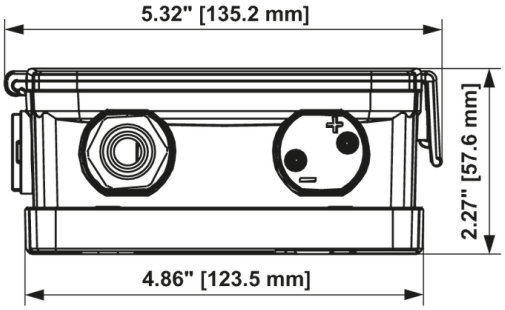
Dimensions